BASSO

B1650LW

C Series Bradder

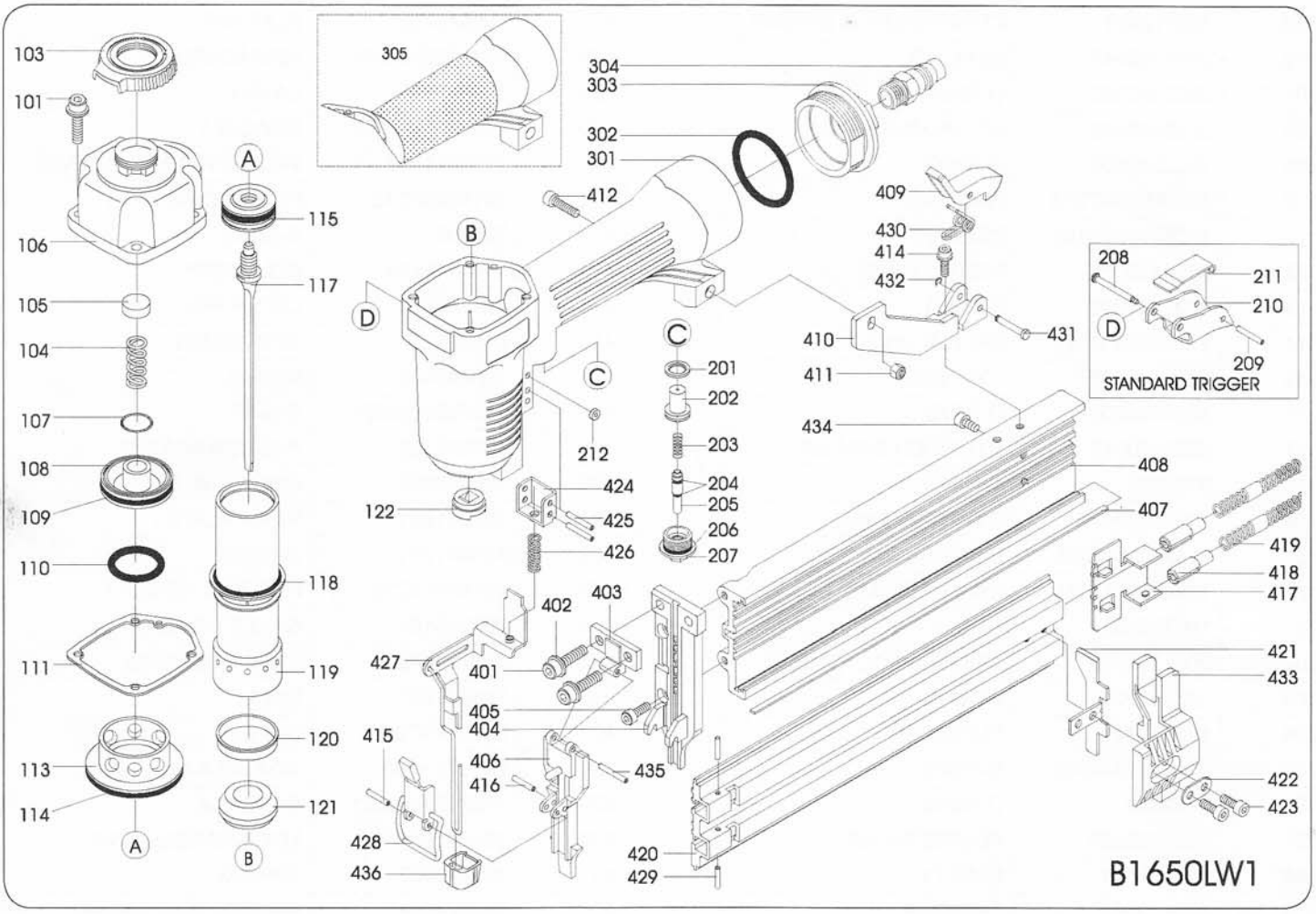

Technical Data	
Model	B1650LW
Type	C Bradder
Size	290 x 56 x 245mm
Weight	1.6kg
Fastener	C Brads 19-50mm 16 Gauge

BASSO

B1650LW
C Series Bradder

ITEM No.	PART NUMBER	DESCRIPTION
101	201105201A	BOLT ASSEMBLY
103	103910301	DEFLECTOR
104	100110401	COMPRESSION SPRING
105	2001091000	SEAL
106	103910604	CAP
107	2152011	O-RING
108	100110906	HD VALVE PISTON
109	2152041	O-RING
110	2152027	O-RING
111	100112401	PACKING Use 1132M00100012
113	100111203	COLLAR
114	2152084	O-RING
115	2152005	O-RING
116	103011401	MAIN PISTON
117	105910103B01	DRIVER UNIT
118	2152087	O-RING
119	103911807	CYLINDER
120	100111701	CYLINDER RING
121	100111905	BUMPER
122	100112301	JOINT GUIDE
201	100120103	SEAL
202	100120204	TRIGGER VALVE HEAD
203	100122001	SPRING
204	2152060	O-RINGS (2)
205	100120305	TRIGGER VALVE STEM
206	2152002	O-RING
207	100120605	TRIGGER VALVE GUIDE
208	100120903	STEPPED PIN
209	246142	SPRING PIN
210	103920801	TRIGGER*
211	100121501	SAFETY
212	226105	E-RING Use 104620201
301	100130116	GUN BODY
302	2152109	O-RING
303	100130310	END CAP
304	2301021	AIR PLUG
305	2027810047	HANDLE GRIP
401	3002190200	BOLT ASSEMBLY
403	105941101	PLATE B
404	105940103	DRIVER GUIDE
405	20110416C12	HEX SOC HD BOLT
406	105941001	PLATE A

ITEM No.	PART NUMBER	DESCRIPTION
407	105940702	FLAT BAR
408	105940203	MAGAZINE A
409	100843001	LATCH
410	105940503	BRACKET
411	2501042	LOCK NUT
412	20110418C12	HEX SOC HD BOLT
414	201104121A	BOLT ASSY (2)
415	246442	SPIRAL PINS
416	246122	SPRING PIN
417	105940402	PUSHER
418	105940802	SHAFT
419	100841303	SPRING
420	105940303	MAGAZINE B
421	105941401	REAR PLATE
422	105941701	GASKET
423	20110414C12	HEX SOC HD BOLT
424	100142801	SAFETY GUIDE
425	246192	SPRING PINS (2)
426	103943201	SPRING
427	105941201A01	SAFETY UNIT
428	105941801A01	LOCK HANDLE UNIT
430	100842903	SPRING
431	101542601	LATCH PIN
432	226105	E-RING
433	105941301	PROTECTING HOOD COVER
434	20110406C12	HEX SOC HD BOLT
436	105940902	PROTECTIVE CASING

*Single Fire Trigger Option
Trigger – 10682060B01
Return Spring - 100121001